# Single Panel Overview

*Standard RJ-45 connections to all LightSync devices*

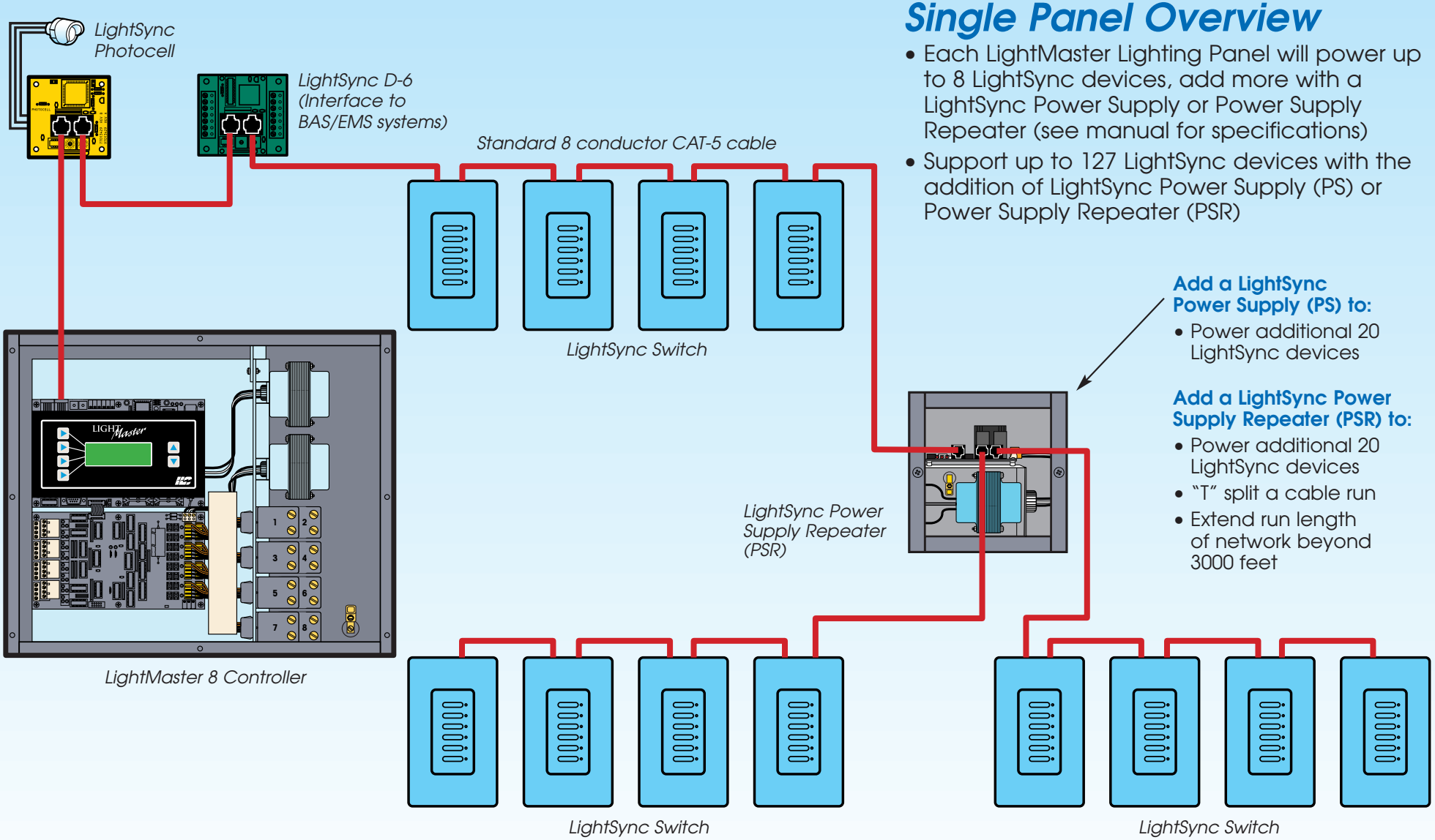


## Single Panel Overview

- Each LightMaster Lighting Panel will power up to 8 LightSync devices, add more with a LightSync Power Supply or Power Supply Repeater (see manual for specifications)
- Support up to 127 LightSync devices with the addition of LightSync Power Supply (PS) or Power Supply Repeater (PSR)

**Add a LightSync Power Supply (PS) to:**

- Power additional 20 LightSync devices

**Add a LightSync Power Supply Repeater (PSR) to:**

- Power additional 20 LightSync devices
- "T" split a cable run
- Extend run length of network beyond 3000 feet