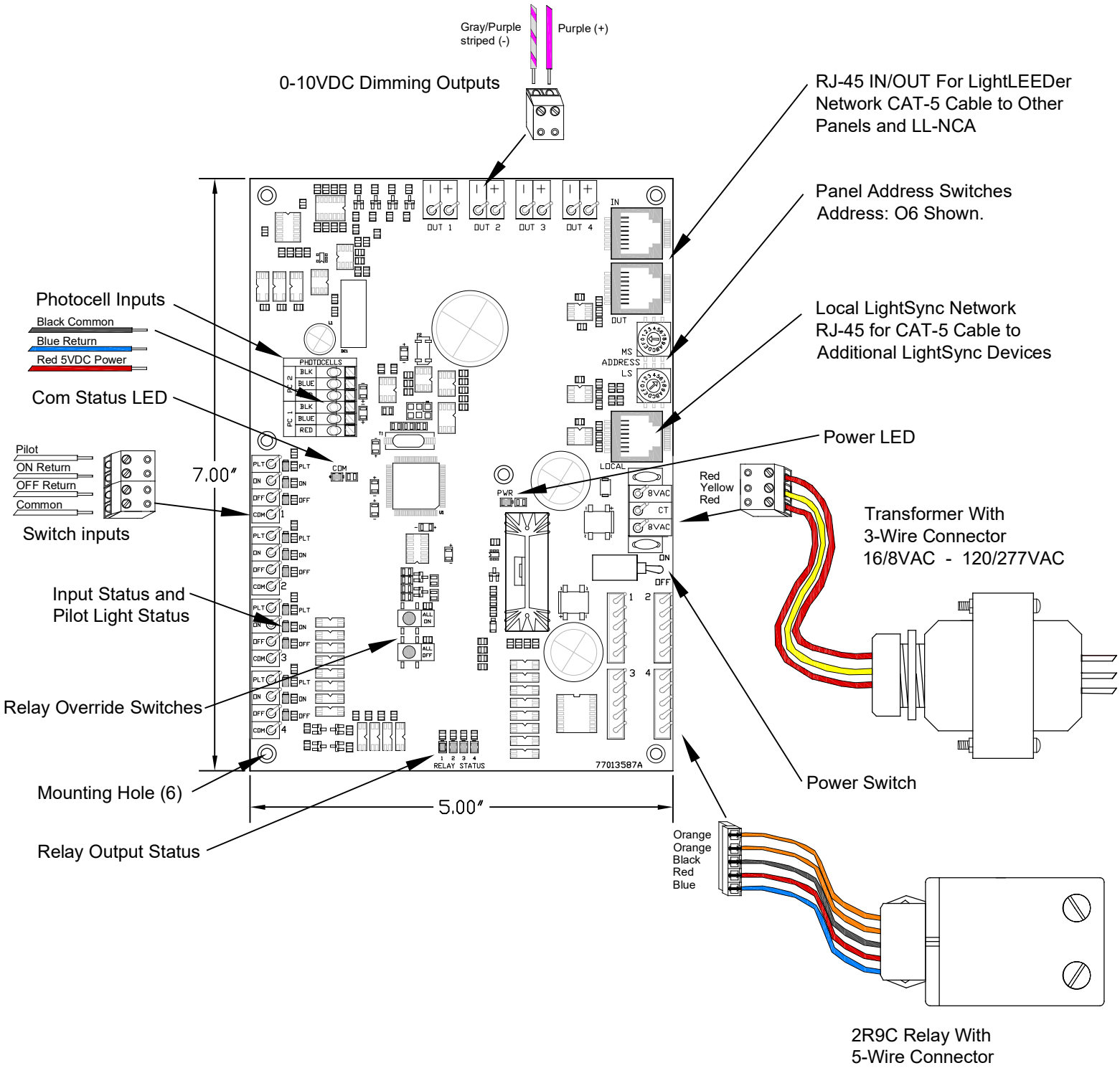LightLEEDer LM4 Retrofit
Product Details