LightLEEDer EVO Controller
Wiring Details

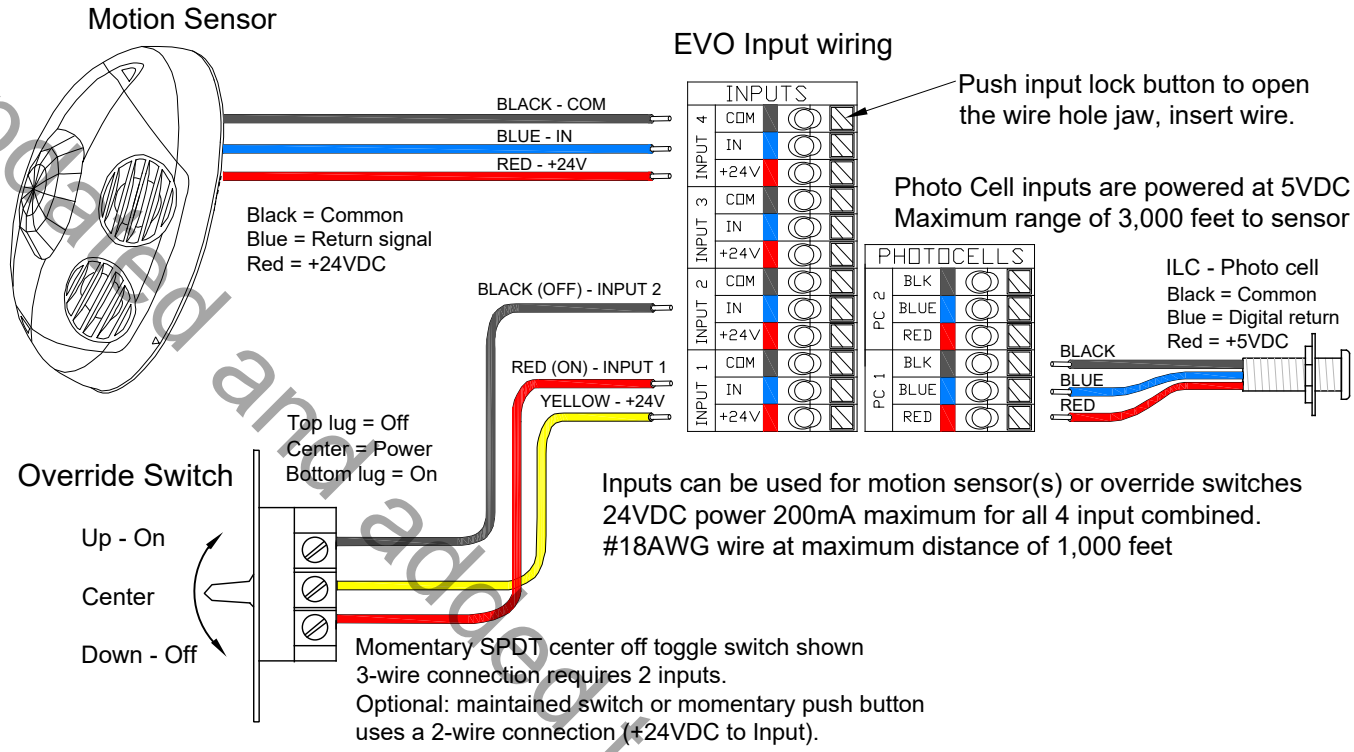

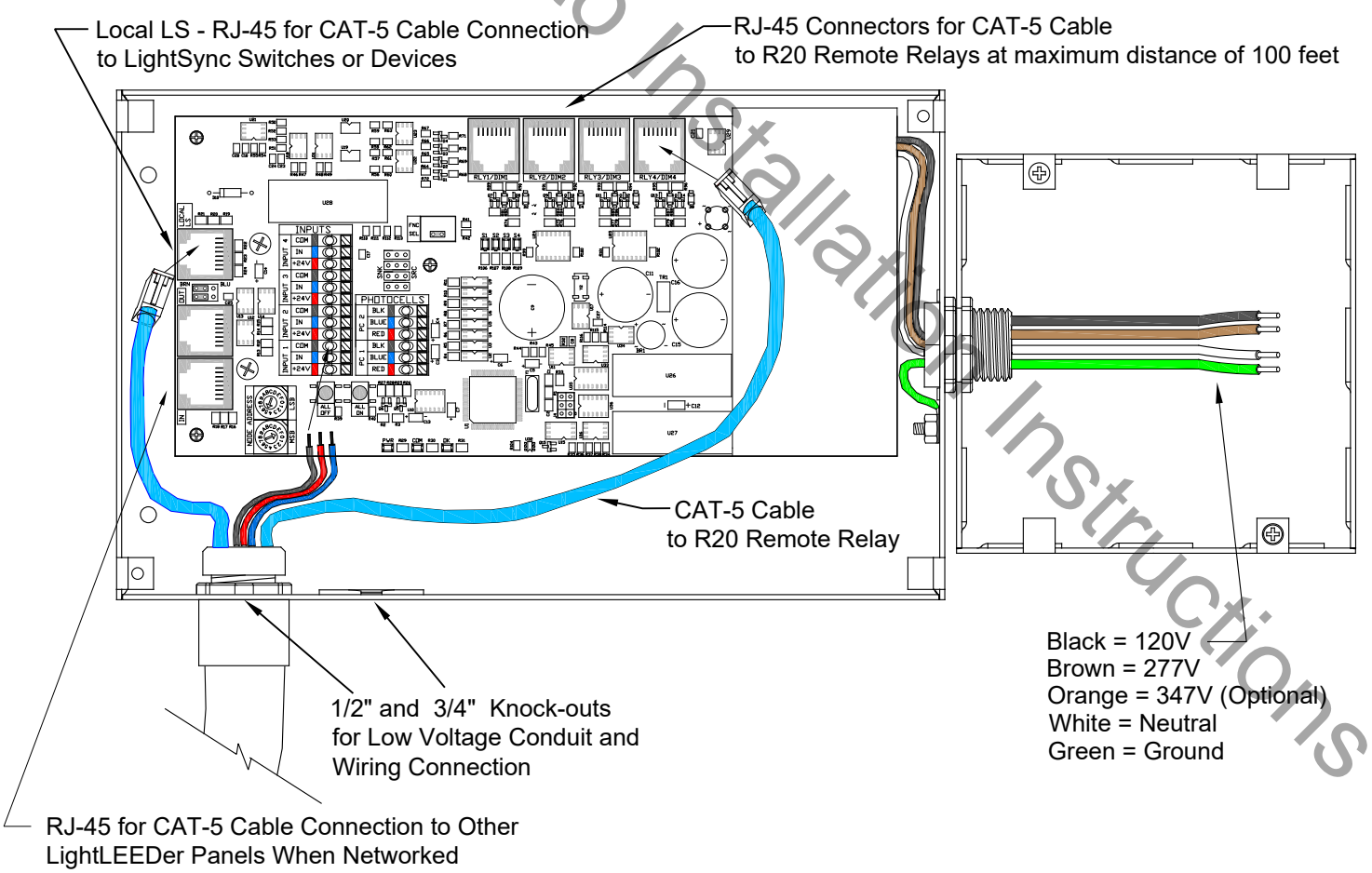

Updated and added to Installation Instructions